Under-Mount Sink
Installation Instructions

Follow these instructions if you are under mounting your sink

Note – All Higold undermount sink installations use these instructions. Therefore images may differ from your sink model. Ensure your sink is in perfect condition before installation

Installation components

	Description	Quantity
A	Stainless Steel Sink	1
B	Box of hole plugs, anchor clips and bolts	1

Step 1 – Preparing Benchtop

A template is provided or you can create one

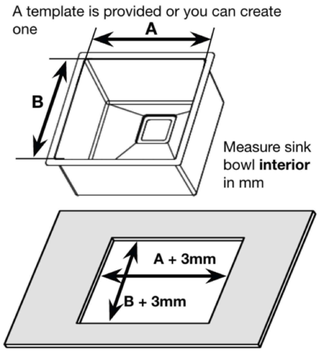

Measure sink bowl **interior** in mm

Cut hole in benchtop as per above. Match bench hole corner style to sink, i.e. rounded corners for round cornered sink

Step 2 – Prepare mounting holes

Measure and mark the mounting hole positions under the bench (SEE SUPPLIED TEMPLATE)

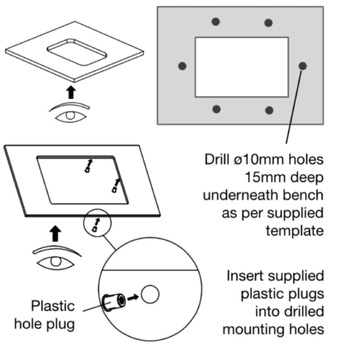

Drill ø10mm holes 15mm deep underneath bench as per supplied template

Insert supplied plastic plugs into drilled mounting holes

Step 3 – Affix Sink Under Bench

Position sink under bench in line with hole

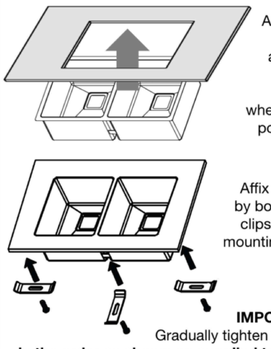

A suitable glass adhesive can be applied when sink is positioned

Affix the sink by bolting the clips into the mounting holes

IMPORTANT: Gradually tighten the clips **in the order as shown on supplied template. Failure to do this may deform the sink**

Top-Mount or Flush-Mount Sink
Installation Instructions

Follow these instructions if you are top-mounting your Higold sink into a bench.

NOTE – All Higold topmount sink installations use these instructions. Therefore images may differ from your sink model. Ensure your sink is in perfect condition before installation

Installation components

	Description	Quantity
A	Stainless Steel Sink	1

Step 1 – Preparing Benchtop

A template is provided or you can create one

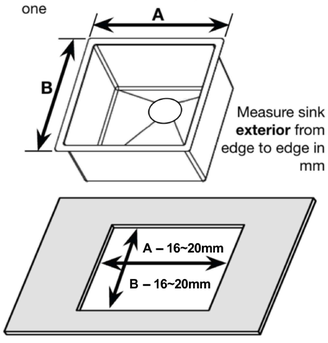

Measure sink **exterior** from edge to edge in mm

Cut hole in benchtop. If flush-mounting a custom rebate has to be cut to exactly house the sink lip edge

Step 2 – Apply Adhesive Sealant

Fill in adhesive (glass glue) 5-7mm outside the incision, with a width of 3-7mm.

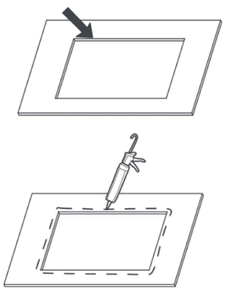

Step 3 – Affix Sink

Insert sink in bench hole and press firmly.

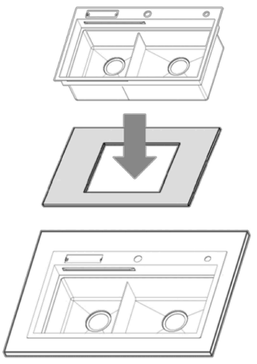

Waste/Strainer
Installation Instructions

Your strainer should be installed by a licensed plumber. Use the screw to tighten the main drain body (from underneath sink) and the stainless steel strainer (from above the sink) into place. Sealants are not required. Install the basket on top of the strainer.

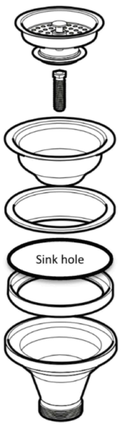

Stainless steel basket
Removable for cleaning and general use

Fixing screw

Stainless steel strainer
Insert in rubber seal

Rubber seal
Insert this into sink hole

Rubber gasket
Inserts into main drain body

Main drain body
Installed underneath sink hole. Plumber connects to plumbed drain.

Care Instructions
Important regular care

Higold sinks are engineered with premium materials and patented technology for durability

Stainless steel sinks are hand-made with genuine 304 (18/10) Stainless Steel offering optimum hygiene and durability. Nano coated models provide premium scratch resistance and act to repel liquids

Composite Granite Sinks are constructed from a patented highly dense composite formula that results in the absence of bubbles and internally uniform density and colour.

Follow these care requirements to maintain your Higold sink in top condition for years

Do
- ✔ Regularly rinse and clean with mild soap and water and wipe with a soft sponge or microfiber cloth
- ✔ Always towel dry the sink after use to prevent water spots and hard water / mineral deposits
- ✔ For stubborn stains, gently scrub with a baking soda paste or metal polish paste (Autosol/Brasso)
- ✔ For hard water stains, use a 50:50 vinegar/water solution then rinse and dry thoroughly
- ✔ For brushed stainless steel, always clean in the direction of the surface brush grain

Don't
- ✗ Do not use abrasive scrubbers such as steel wool, abrasive pads, and harsh brushes
- ✗ Do not use harsh chemicals on the surface (bleach based, ammonia based, and acidic cleaners)
- ✗ Do not allow cleaning liquids that contain chlorides to remain on the surface of stainless steel sinks
- ✗ Do not place hot pans or pots directly on nano-coated surfaces
- ✗ Do not allow acidic/salty liquids/substances (eg. vinegar, fruit juice, cola, spirits, soy sauce, tea bags) to remain on surface
- ✗ Do not allow water to pool as prolonged exposure can lead to limescale deposits
- ✗ Do not drop heavy items onto sink to prevent cracks (granite) or dents (stainless steel)
- ✗ Do not drag heavy or dirty cookware and items across sink surface to minimize scratching
- ✗ Do not cut or slice food directly on the sink surface

It is important to understand that uncoated stainless steel surfaces can still present rust, particularly if there is iron content in the water that is left on the surface. However, this can typically be easily addressed when it is only surface rust and removed using a suitable rust remover. The 304 stainless steel's natural barrier to resist rust generation will quickly reform and continue to resist rust formation.